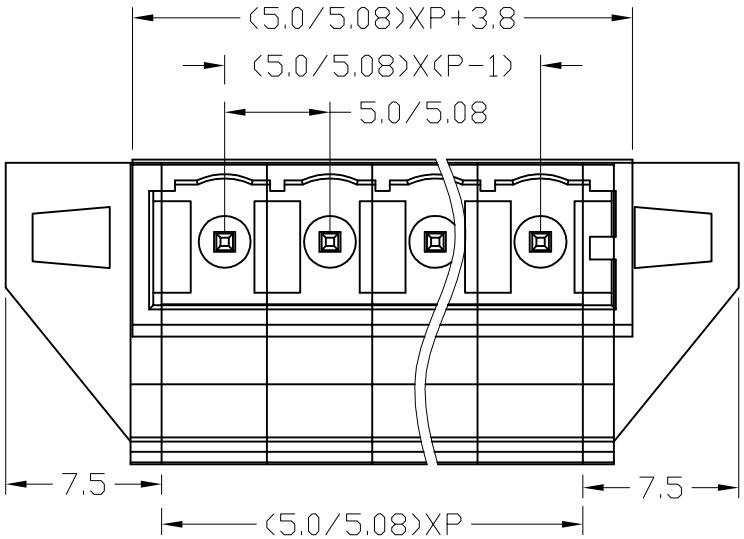

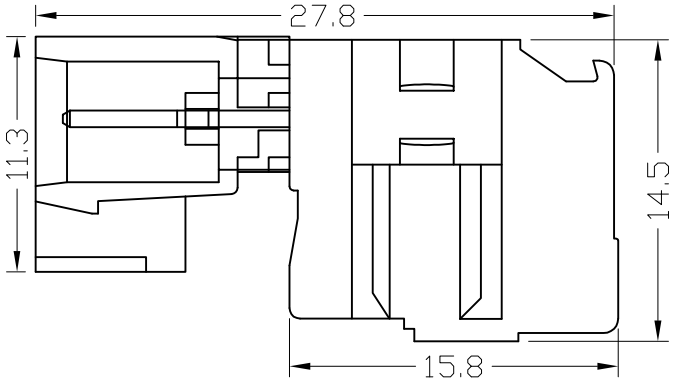

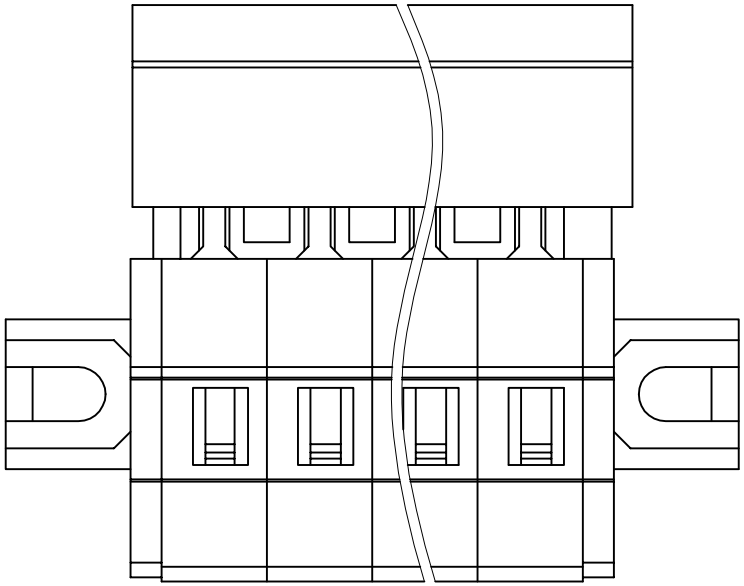

300V 15A 22-14AWG 2.5mm^2
Piles: (2-22P)
Pitch: 5.0mm(.197")/5.08mm(.200")

Material

Housing: PA66(UL 94V-0)
Wire guard: Stainless steel
Pin header: Red Copper

设计/Designed by	绘图/Drawing by	审核/Checked by	批准/Approved by	未注公差 General Tolerance	
				x. ±0.2	x.° ±2°
		图名/File name	文件编号/File No.	.x ±0.1	.x° ±1°
新莱亚电子 XINLAIYA ELECTRONIC CO.,LTD		XY2505FRMA-5.0 5.08		.xx ±0.05	.xx°±0.5°
			页序/Sheet	.xxx ±0.01	
		备注 /Remark		单位/Units: mm	

序号/RevNo.	更改记录/Revision note	签名/Signature	日期/Date