Specification

Customer		Name	Fuel tank sensor	Type	MR-MS3-150

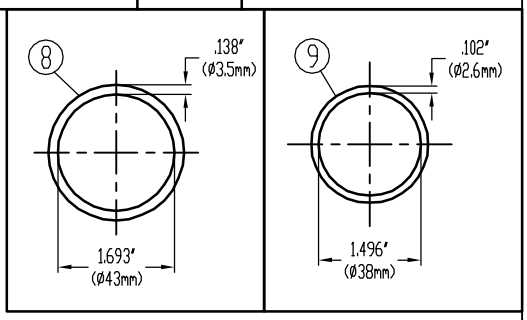

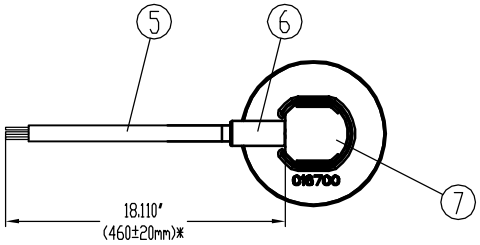

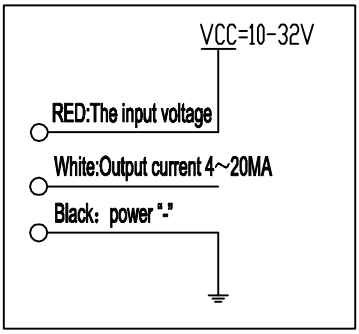

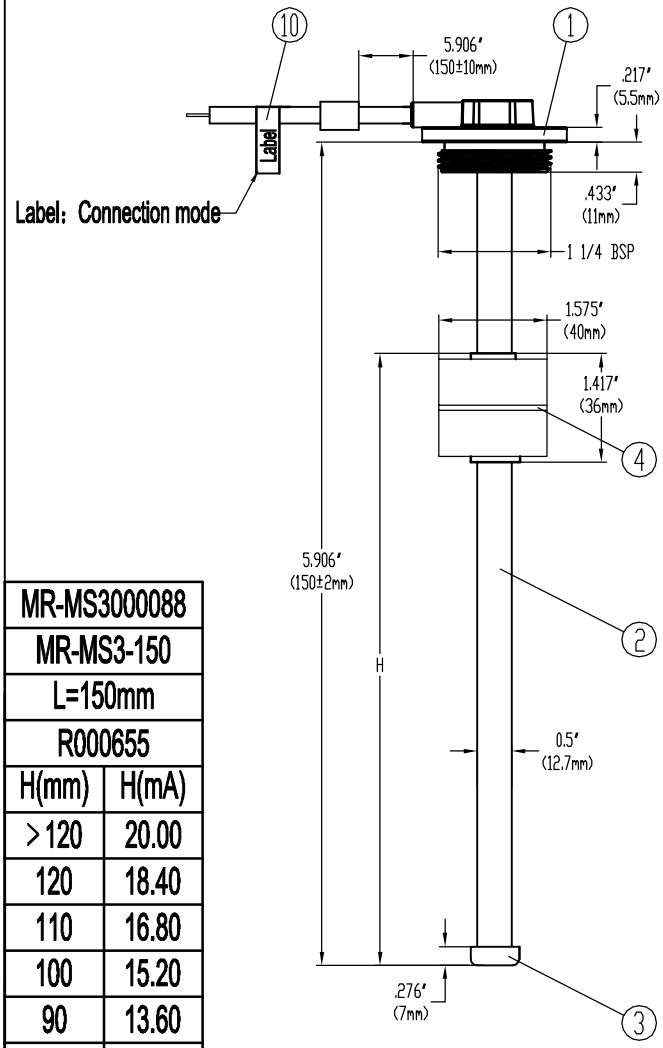

MR-MS3-150	→ Sensor type and length
MR-MS3000088	→ Material no.
4-20MA	→ Current
DATE	→ Date year W weeks

MR-MS3000088	
MR-MS3-150	
L=150mm	
R000655	
H(mm)	H(mA)
>120	20.00
120	18.40
110	16.80
100	15.20
90	13.60
80	12.00
70	9.33
60	6.67
48	4.00

NO.	Name	Material	Note
10	Label		
9	O-ring	NBR70	Ø38*Ø2.6
8	O-ring	NBR70	Ø43*Ø3.5
7	ALU Cover	ALU	
6	Rubber Cover	NBR	
5	Cable	PVC	red\white\black
4	Float	SUS304	Ø40*36*15.5
3	Plug	PA66	
2	Reed pipe	SUS304	Ø12.7*0.6
1	Sensor head	SUS304	

Ningbo Holleywin Export&Import Trade Co., LTD.

APP	CHK	DSG	Remark	Scale	Page
			RoHS	1:1	1/1

PDF created with pdfFactory Pro trial version www.pdffactory.com